MATLAB SIMULINK© : AN EASY-TO-USE TOOL TO STUDY MECHANICAL RESPONSE OF COLLAGEN GELS SUBMITTED TO COMPLEX STRAIN EXCURSIONS

Bernard Drouin[1-2], Diego Mantovani[1], Ramiro M. Irastorza[3]

[1] *Laboratory for Biomaterials and Bioengineering, Department of Materials Engineering and University Hospital Research Centre, Laval University, Pavillon Pouliot, Québec City (Qc), Canada;* [2] *Physics Dept., F-X-Garneau College, Quebec City, Canada*

[3]*Instituto de Física de Líquidos y Sistemas Biológicos (IFLYSIB), CONICET, La Plata, Argentina*

Introduction

Natural macromolecules and in particular Collagen hydrogels biomaterials are a good choice for scaffolding cells in tissue engineering [Couet, 2007]. Because of the viscoelastic nature of these hydrogels, dynamic solicitation as encountered in bioreactors or in mechano-biology experiments can induce mechanical behaviour hard to anticipate. This paper presents a graphical dynamical modeller and simulator [Mathworks, 2012] that can be used to anticipate the mechanical behaviour of these gels under whatever strain (relaxation, cyclic loading) or load (creep) solicitation.

Methods

Mechanical behaviour of collagen gels have been investigated using unconfined compression. Relaxation tests indicate that a viscoelastic model based on two Maxwell bodies can satisfactorily reproduce the load curve as showed in Figure 1.

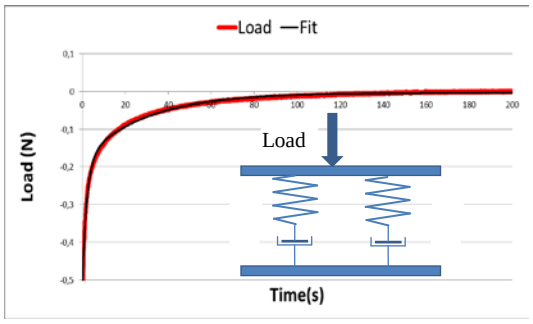

Figure 1: Relaxation test. Load data fitted with two Maxwell bodies.

The stress-strain equation of this system is [Mase, 1969]

$$\ddot{\sigma} = (G_1 + G_2)\ddot{\varepsilon} + \frac{G_1}{\eta_1}\frac{G_2}{\eta_2}\left[(\eta_1 + \eta_2)\dot{\varepsilon} - \left(\frac{\eta_1}{G_1} + \frac{\eta_2}{G_2}\right)\dot{\sigma} - \sigma\right] \quad (1)$$

Results

Figure 2 represents the Simulink diagram that reproduces this equation. The graphical approach of this tool is obvious. The presentation will indicate how this diagram has been used to reproduce results of complex strain solicitations tests performed on collagen hydrogels.

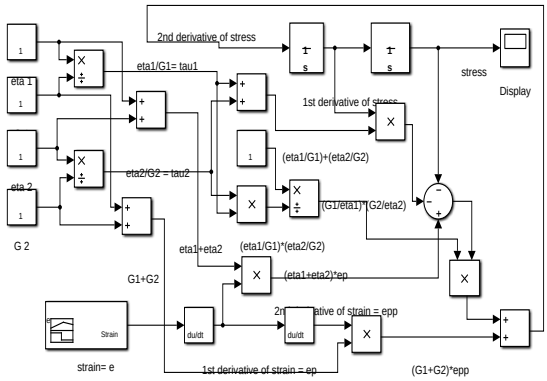

Figure 2: Simulink diagram used to reproduce the mechanical behaviour of two Maxwell bodies.

Discussion

We have used this tool to investigate a large number of stress-strain relations [Fung, 1993]. In particular, the nonlinear Mooney-Rivlin approach is best suited to reproduce the mechanical response of collagen gels submitted to cyclic unconfined compression.

References

Couet *et al*, Macromolecular Bioscience, 2007, 7, 701.

Fung, Biomechanics: mechanical properties of living tissues, 2nd ed.

Mase, Schaum's Outline of Continuum Mechanics, 1969

Mathworks, http://www.mathworks.com /products/simulink/index.html