EFFECT OF HEAD CONTACT AGAINST THE CUP RIM ON OFFSET LOADING TORQUE IN TOTAL HIP REPLACEMENT

Feng Liu[1], Sophie Williams[1], Zhongmin Jin[1,2], John Fisher[1]

[1] Institute of Medical and Biological Engineering, School of Mechanical Engineering, University of Leeds, UK; [2] School of Mechanical Engineering, Xi'an Jiaotong University, P.R. China

Introduction

Head contact on the rim of the acetabular cup has led to observations of stripe wear in retrieved ceramic hip implants [Nevelos et al., 2000]. Rim contact has been associated with mal-positioning of the bearing components [Fisher, 2011]. This study has calculated the resulting offset loading torque, and investigated design parameters that may affect the torques due to head-cup rim contact.

Methods

A rim contact model was analytically evaluated, considering a lateral translation of the head (*d*) with a major load in the vertical direction at the head centre (O_1) corresponding to a ground reaction force at heel strike (F=2500 N) (Fig. 1).

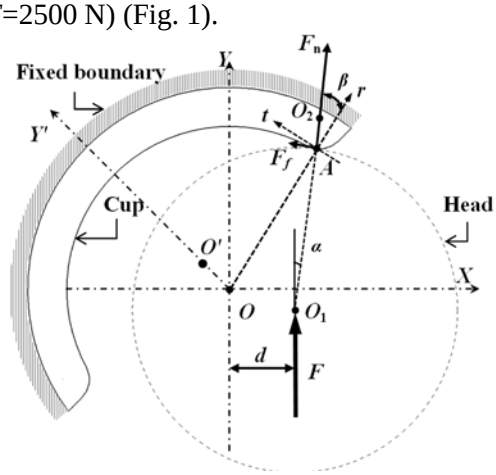

Figure. 1. Head contact on the rim of the cup

A rounded rim with the centre (O_2) was assumed for the cup. Additionally, an eccentric cup with the outer bearing centre (O') was also analysed. The contact force at the rim (A) was resolved into normal (F_n) and friction (F_f) components. The torque about the cup fixation interface was then calculated. A parametric study was conducted, assessing the effects of bearing design (cup rim radius, head size, cup coverage and eccentricity of cup), cup inclination, and bearing material combinations with representative coefficients of friction (CoF) (μ) on the torque (Table 1).

Table 1: Major parameters for bearings

No	Rim radius (mm)	Cup inclination (degree)	Cup coverage (degree)	Cup Eccentricity (mm)	Head size (mm)	Bearing materials
1	0.5/2/4	45	160	0	50	MoM*
2	4	35/45/55	160	0	50	MoM
3	4	45	140/160/180	0	50	MoM
4	4	45	160	0/1/2/3	50	MoM
5	4	45	160	0	28/36/50	MoM
6	4	45	160	0	28	MoM/CoC/MoP

* Metal-on-Metal (MoM); Ceramic-on-Ceramic (CoC); Metal-on-Polyethylene (MoP)

Results

The typical torque calculated as a function of the translational displacement is shown for a 50 mm MoM bearing (μ=0.1) (Fig. 2). The torque from the normal force increased linearly with increasing displacement while the torque due to friction was constant. The parametric study showed increased torque with increasing head diameter, eccentricity of the cups, and increased CoF of the bearing, but independent of cup rim radius, cup inclination and coverage considered.

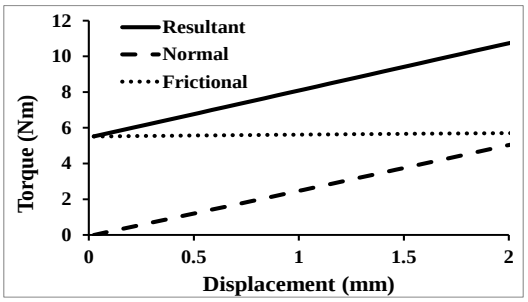

Figure 2 Torque as a function of head translation

Discussion

Torques calculated were generally >7 Nm (Fig. 2), indicating that the level which may cause cup loosening is reached [Wimmer, 2006]. Considering the combined effects of all the parameters studied, larger MoM bearings are more likely to be subjected to the most significant increase in torques due to the rim contact associated with the displacements.

References

Fisher, J Bone Joint Surg Br, 93:1001-1004, 2011.
Nevelos *et al*, J Arthroplasty, 15:793-95, 2000.
Wimmer *et al*, Proc IMechE Part H: J of Eng in Medicine, 220:219-2272006.